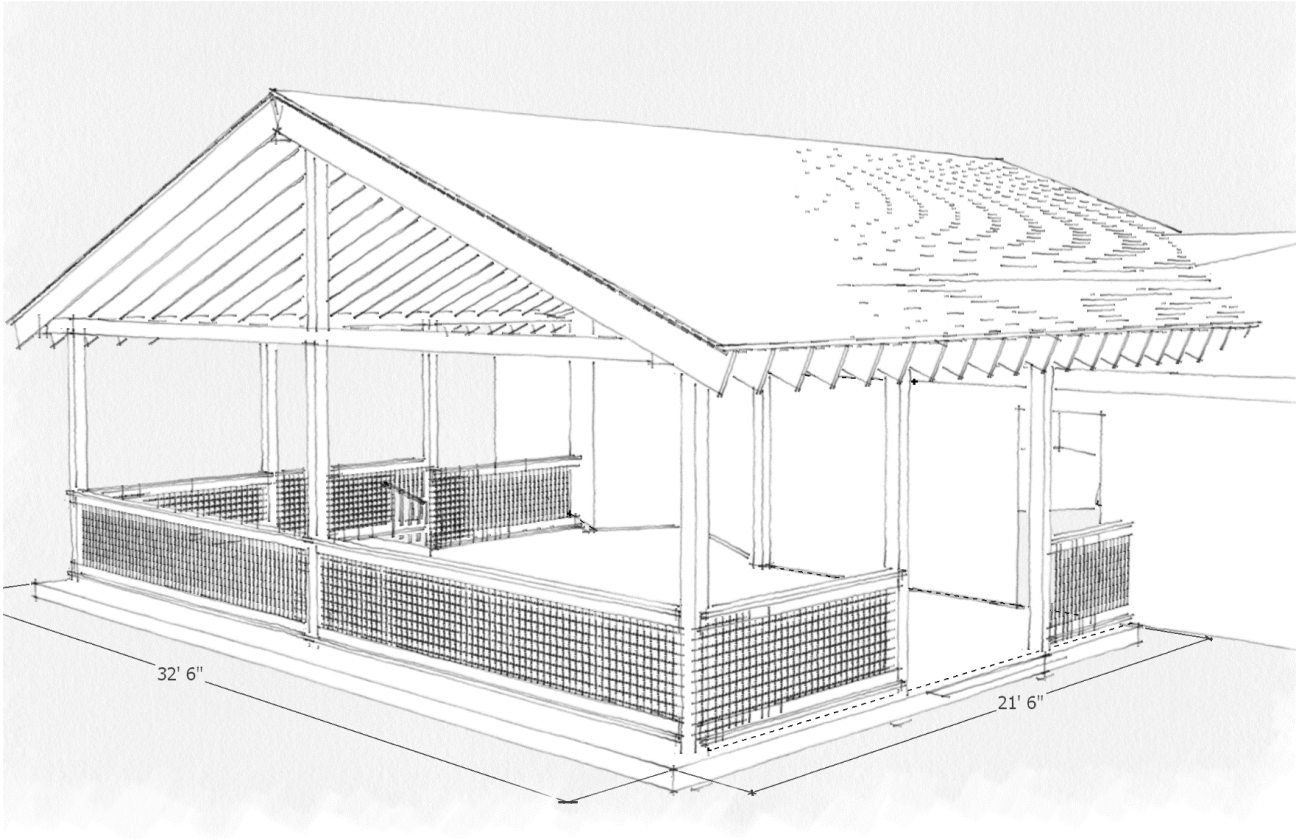

Valle Escondido Clubhouse Deck Improvement Proposal

October 3, 2019

Summary

The Deck improvement committee proposes a renovation project to remove the existing deck structure on the south side of the Valle Escondido Clubhouse and the construction of a replacement structure as described in this proposal. The proposal is to complete the project in the spring and summer of 2020. The estimated project budget is $22,830. The committee is asking for the board to approve of a new capital budget allocation for 2020 of $1500 and to concur with the targeting of currently budgeted line items as described below and summarized in Table 1.

The proposed project will be largely completed by volunteer labor and equipment. The required excavation machine work is being volunteered by Randall Korinek. Woodworking gear, scaffolding, and other required power and hand tools are being provided by other volunteers on the project. Consequently, the estimate of the project cost to the community is comprised solely of the material costs. Theses material costs have been obtained through Randall Lumber and Hardware in Taos, Home Depot and other appropriate sources. The detail estimate is shown in Appendix II. The total estimated cost comes to $22,830 including a $2500 contingency budget.

The committee understands the scarcity of funds for projects such as these, but also feels strongly that this project will provide a significant improvement to the clubhouse and be viewed as a valuable amenity for the community.

Therefore, the committee researched potential ways of funding this important project and stitched together a proposed funding as shown in the following table. The kernel of the project is provided by allocating $2500 from the 2020 clubhouse restoration budget. Secondly, the clubhouse committee has over the years administered an annual garage sale. These funds have historically been spent on items such as swing sets and the like. A balance has built up over the last few years as those needs have for now been met. So, it is the proposal of this committee that those accumulated funds as well as the proceeds from the 2020 garage sale be targeted to this project (requires concurrence from the clubhouse committee -- $4430.70 + 996.01 + 1000 = $6426.71). Similarly, the golf committee has over the years

administered a mulligan money fund. The golf committee sells mulligans at golf tournaments and has over the years used the collected funds to make amenity improvements for the golfing community (examples include the metal benches on the tee boxes). As this improvement will be viewed as a significant amenity to the golfing community it is proposed to use the accumulated net balance of that fund as well as the 2020 proceeds to fund this project. (requires concurrence of the golf committee -- $7923.95 + $1000 = 8923.95). Since this project will consume a fair amount of volunteer energy for 2020 is it proposed to work with the golf committee to defer the 2020 installment of the annual improve a tee box budget and retarget the 2020 budget of $2000 towards this project. This committee will sponsor a fundraiser in 2020 to support the completion of the project a target an amount of $1500 to support its completion. Assuming the above allocations, the project would then require approval of new capital funds in the amount of $1500 to complete the budget.

Project Proposed Funding Sources	
Targeting of currently planned Clubhouse 2020 capital project	
Allocate 2020 annual clubhouse restoration capital budget	$ 2,500.00
Targeting of Special purpose funding Sources	
Garage Sale Balance (Carry over from prior years)	$ 4,430.70
Garage Sale Net for 2019	$ 996.01
Unspent Mulligan Money Net Balance through 2019	$ 7,923.95
Targeting of 2020 Mulligan/Garage Sale Funds	
Garage Sale Target 2020 (Prospective funds)	$ 1,000.00
Mulligan Money Target 2020 (Prospective Funds)	$ 1,000.00
Targeting of currently planned 2020 capital projects	
Allocate 2020 Annual Tee Box per year budget	$ 2,000.00
Community support of project	
Fundraiser event to be held for this purpose	$ 1,500.00
Committee request for new Capital Funds for this project	***$ 1,500.00***
Total	$22,850.66

For reference, details of the current balances of the garage sale funds and mulligan money are shown in Appendix IV.

Proposed Project

Background

Several years ago, Valle Escondido volunteers constructed the existing small deck space utilizing a small material budget and volunteer labor. This deck was then furnished with 3 small tables with umbrellas. Since its construction it has been renovated once and then supplemented with shade sails to provide shade.

The deck has proven to be a very desirable and popular gathering space for valle Escondido residents, golf members and other clubhouse guests. However, usage is limited by available deck space. The shade sails, while an improvement over table umbrellas, do not provide rain protection and are potentially unsafe during high winds.

Because of the popularity of the space and a desire to overcome its shortcomings, a consensus interest to launch an improvement project emerged among clubhouse users during the 2018 and 2019 seasons. As a result, a committee was formed to study the requirements and propose a project to be included in the 2020 VEHA capital improvement plan/budget.

Project goals

The primary project goals are:

1. **Create a larger outdoor gathering space to support at least twice as many dining tables and accompanying seating.**
2. **Space should provide shade and weather protection**
3. **Orientation and design should maximize availability of the view from the clubhouse towards the south valley.**
4. **Design and materials should be esthetically pleasing and consistent with the mountain rustic guidelines of VE bylaws as well as complementary to current clubhouse structure.**

5. **Size and design should be consistent with an extension of our current liquor license to the entire space.**
6. **Structure should be built to a standard that allows it to become a permanent and safe structural addition to the clubhouse**
7. **Design and materials should be consistent with minimizing long term maintenance costs**
8. **Location of structure should provide weather protection of primary clubhouse entrance.**
9. **Design should provide improvement to the accessibility/usability and safety of staircase accessing office and maintenance shop.**

Proposed Design

The proposed clubhouse improvement is shown in Figure 1. For a collection

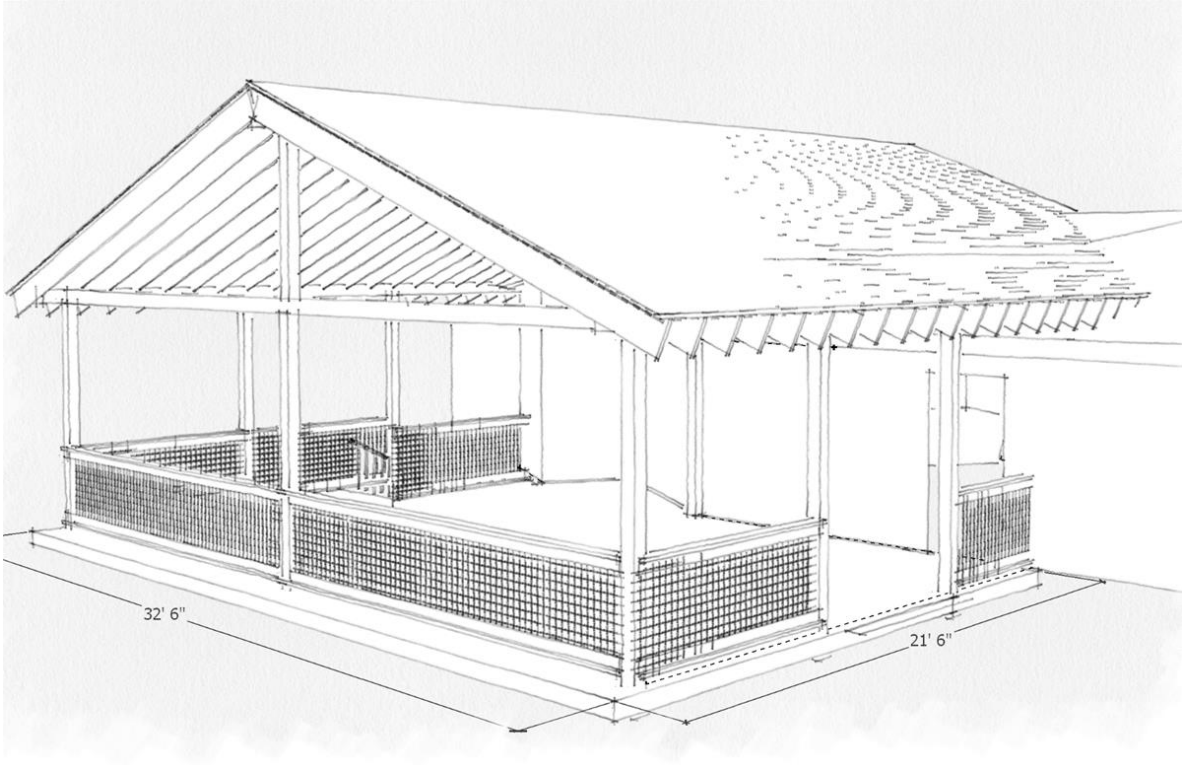

Figure 1-Valle Escondido Patio Addition

of various views of the structure from additional perspectives, please reference Appendix III.

Size and orientation

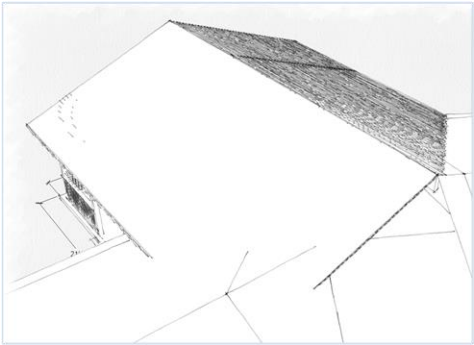

Figure 2 Roof Intersection with Clubhouse

The overall patio space will be expanded to 21.5’ x 32.5’ (appr 700 ft2). It will be oriented perpendicular to the original clubhouse structure. It is sufficiently wide to provide coverage of the main clubhouse entrance on the east side. On the west side it will provide weather coverage for a stair way to intersect with the existing stairway to the office and maintenance shop. The depth of the addition will extend to the flower box near the first tee and will neither encroach on the existing tee box or the practice green. The center of the addition is aligned with the bend point in the current clubhouse structure. The center of the new roofline will intersect at the elevation and location of the northeast end of the clubhouse annex. (see figure 2)

Roof Design

A gable roof design and post and beam structure were selected to maximize the panoramic views available. See figure 3. trusses or a shed roof would severely limit the view. The design will incorporate exposed beams and posts to promote an outdoor airy and rustic appearance. Posts, beams and joists will

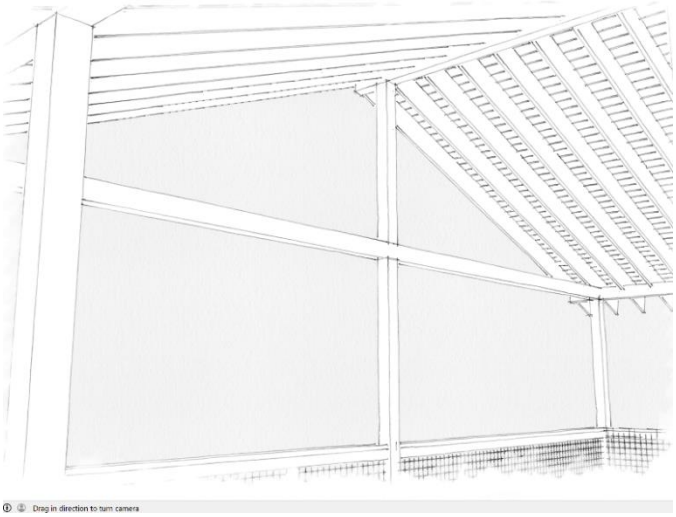

be stained wood. The roof decking will be tongue and groove pine as shown in Figure 4 .

Figure 4 T&G Ceiling Fit and Finish

The exterior surface of the roof will be covered with metal roofing in a color consistent with the current clubhouse roof. The sizing of the posts and beams are chosen to allow the structure to be supported on the perimeter. This was done to provide an open and flexible space on the patio surface. The Ridge beam will be a 5 ½" x 18" Glulam beam that spans between the front of the roof back to a post placed adjacent to the corner of the existing clubhouse structure. The drop beams on the sides and front of the structure will be 6x8 Fir beams supported by intermediate posts on the perimeter of the structure. Joists will be 2 x 12 conventional lumber. Posts will be 6x6 and pressure treated. The majority of the roof loads will be carried by the new construction to avoid stressing the existing clubhouse structure. Appendix I includes the structural component sizing analysis of the key components of the design.

Railing Design.

A railing will encompass the complete perimeter of the new patio space to provide safety and comply with our liquor license requirements. The railing will be built with pressure treated lumber and stained. Instead of balusters, a ¼ inch steel mesh with a 4" square pattern will be used. Benefits of this choice include more transparent appearance as well as reduced maintenance. See Figure 5 for a view of this concept.

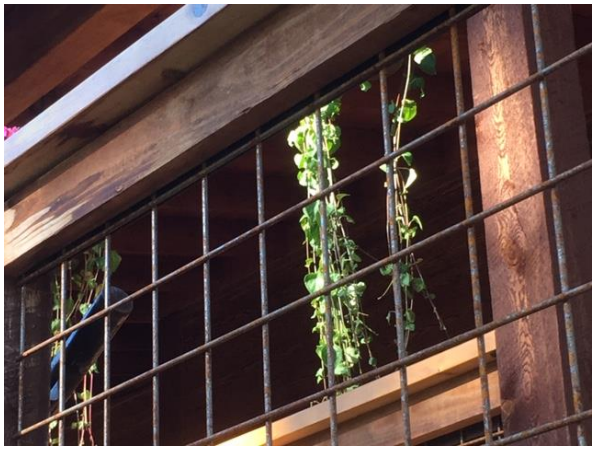

Figure 5 Steel Mesh Railing

Patio

The patio surface will be a concrete slab surface at the grade level of the current sidewalk. This will be more durable and maintenance free than a raised wooden deck structure. The overall shape of the patio surface is as shown in Figure 7.

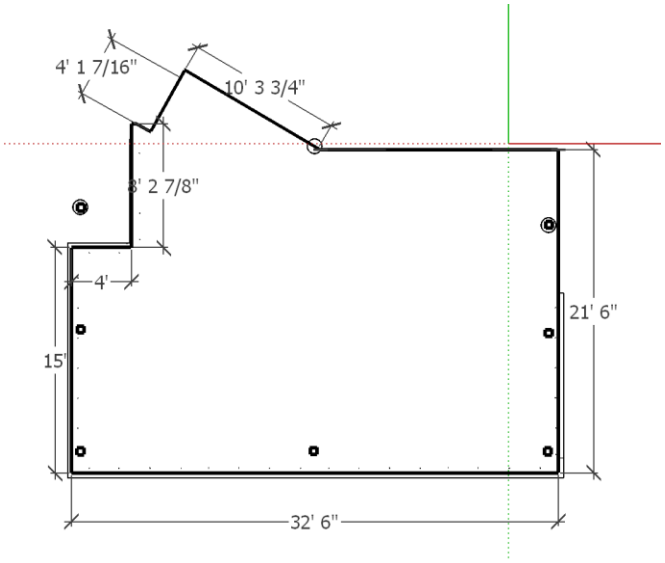

Figure 7 – Patio Floor plan

The surface of the patio will gray and be decorated with a sawcut pattern to provide more visual appeal. See Figure 6 for an example. The foundation for the patio and roof structure will be provided by a combination of a stem wall around the perimeter of the patio surface and supplemented by concrete columns where required (3 locations). The enclosed area is to be backfilled with structural fill. The shape and location of key parts of the foundation system are shown in the following figures.

Figure 6 – Example of Saw Concrete Saw Cut Pattern

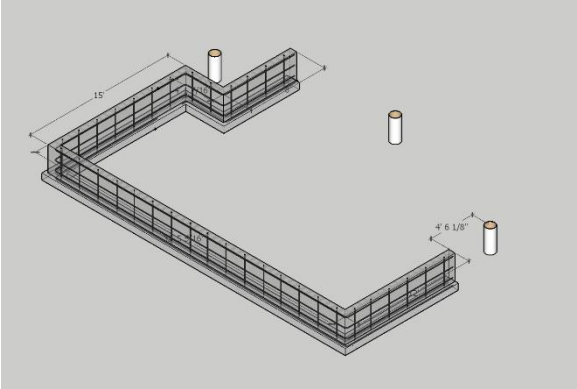

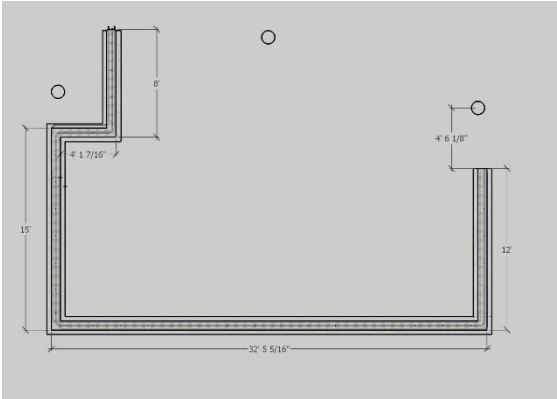

The stem wall will be a steel reinforced concrete structure. The design is shown in Figure 8. The footing will be 16” wide and 8” deep and run the full length of the wall. #4 rebar will be used for both horizontal and vertical reinforcement with vertical runs being 12” on center. The stem wall will rise 32” above the footing. The concrete surface will be 4” of 3000 psi concrete on compacted base material.

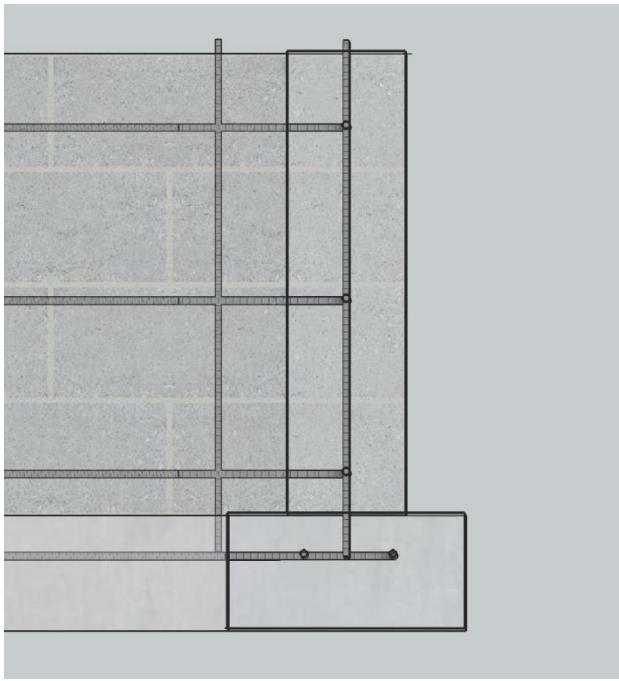

Figure 6 Foundation design

Stairway to Office Area

The upper portion of the existing stairway to the maintenance shop and office will be removed. A new flight of stairs will then be constructed under cover of the new roof structure. This flight will extend from the patio surface 8 steps to a concrete pad that intersects the remaining steps down to the office and shop area. The stairway will consist of serrated bar grate stair treads supported by a 4 x 12 timber on the outside and anchored to the stem wall (retaining wall) on the inside. See adjacent figures for an indication of the stairway configuration and to see the proposed stair tread material.

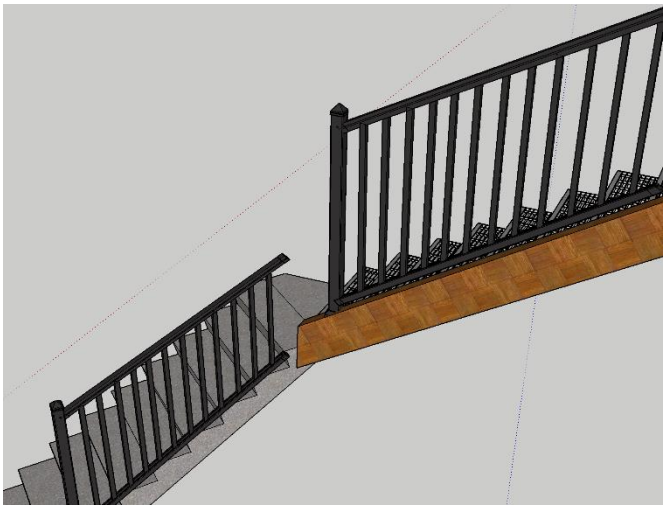

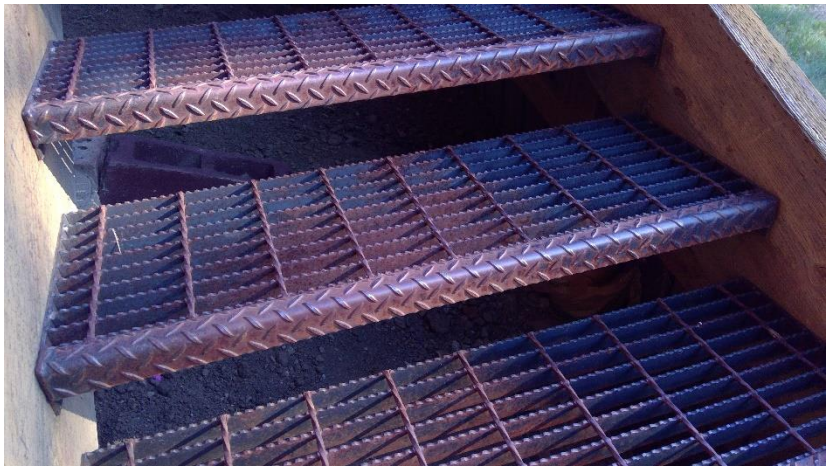

Liquor License Impacts

Our current liquor license will allow an increase in square footage up to 25% of our current footprint of 2844 sq. feet. The approved footprint includes the current deck and access area behind the fence. The adjacent figure shows the overlap of this

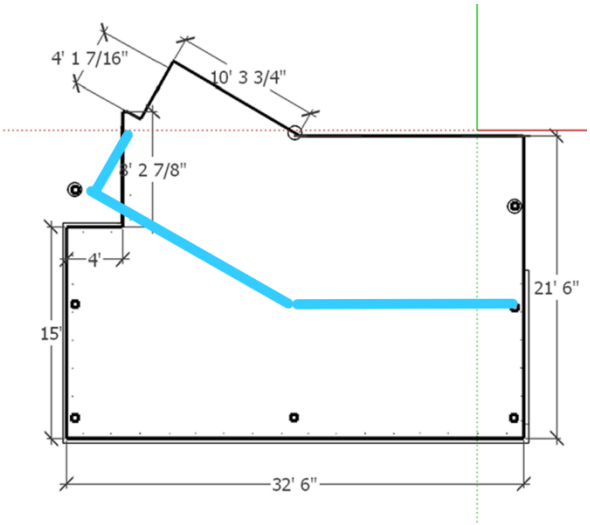

approved outdoor space and our proposed plan. The resulting net addition in our footprint will be approximately 400 square feet. This represents about 18% which is well under the allowed 25%. A request for approval will need to be submitted and received from the New Mexico Alcohol and Gaming Division. But the square footage is well under the 25 percent and should not be an issue.

Schedule

The proposed timing of the project is the spring and summer of 2020. The existing deck structure would be removed, and the foundation and concrete patio work would be done in May of 2020. The roof structure would be built during the summer months when the volunteer population is in the valley.

Appendix 1

Structural Analysis of Key Structural Members

Utilizing Weyerhaeuser Structural Analysis Software

70#/Ft² snow Load

15#/Ft² Dead Load

20#/Ft² Roof Live Load

FORTE WEB

MEMBER REPORT

PASSED

Roof, Ridge Beam

1 piece(s) 5 1/2" x 18" 24F-V4 DF Glulam

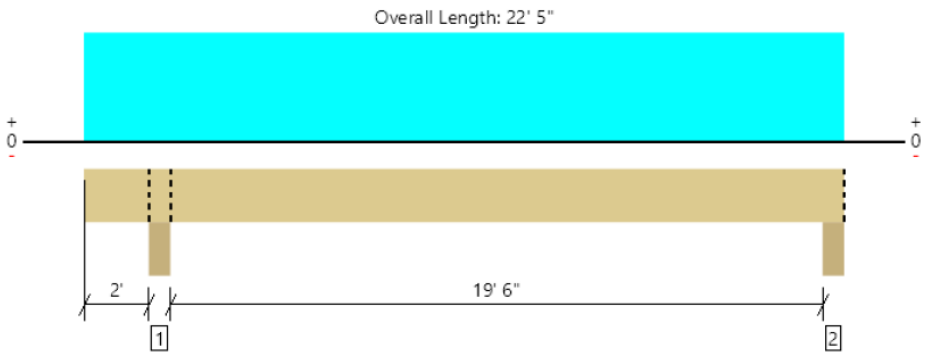

All locations are measured from the outside face of left support (or left cantilever end). All dimensions are horizontal.

Design Results	Actual @ Location	Allowed	Result	LDF	Load: Combination (Pattern)
Member Reaction (lbs)	16857 @ 2' 2 3/4"	19663 (5.50")	Passed (86%)	--	1.0 D + 1.0 S (All Spans)
Shear (lbs)	11424 @ 3' 11 1/2"	20114	Passed (57%)	1.15	1.0 D + 1.0 S (All Spans)
Pos Moment (Ft-lbs)	66607 @ 12' 2 3/4"	65551	Passed (102%)	1.15	1.0 D + 1.0 S (Alt Spans)
Neg Moment (Ft-lbs)	-3410 @ 2' 2 3/4"	52656	Passed (6%)	1.15	1.0 D + 1.0 S (All Spans)
Live Load Defl. (in)	0.780 @ 12' 2 1/8"	0.993	Passed (L/305)	--	1.0 D + 1.0 S (Alt Spans)
Total Load Defl. (in)	0.979 @ 12' 2 3/16"	1.324	Passed (L/243)	--	1.0 D + 1.0 S (Alt Spans)

System : Roof
Member Type : Flush Beam
Building Use : Commercial
Building Code : IBC 2015
Design Methodology : ASD
Member Pitch : 0/12

- Deflection criteria: LL (L/240) and TL (L/180).
- Overhang deflection criteria: LL (2L/240) and TL (2L/180). Upward deflection on left cantilever exceeds overhang deflection criteria.
- Top Edge Bracing (Lu): Top compression edge must be braced at 6" o/c unless detailed otherwise.
- Bottom Edge Bracing (Lu): Bottom compression edge must be braced at 22' 5" o/c unless detailed otherwise.
- Critical positive moment adjusted by a volume factor of 0.96 that was calculated using length L = 19' 8 7/16".
- Critical negative moment adjusted by a volume factor of 1.00 that was calculated using length L = 2' 5 3/4".
- The effects of positive or negative camber have not been accounted for when calculating deflection.
- The specified glulam is assumed to have its strong laminations at the bottom of the beam. Install with proper side up as indicated by the manufacturer.
- Applicable calculations are based on NDS.

Supports	Bearing Length			Loads to Supports (lbs)				Accessories
	Total	Available	Required	Dead	Roof Live	Snow	Total	
1 - Column - SPF	5.50"	5.50"	4.72"	3464	3832	13393	20689	Blocking
2 - Column - SPF	5.50"	5.50"	3.91"	2859	3182	11121	17162	Blocking

- Blocking Panels are assumed to carry no loads applied directly above them and the full load is applied to the member being designed.

Vertical Loads	Location (Side)	Tributary Width	Dead (0.90)	Roof Live (non-snow: 1.25)	Snow (1.15)	Comments
0 - Self Weight (PLF)	0 to 22' 5"	N/A	24.1	--	--	
1 - Uniform (PLF)	0 to 22' 5"	N/A	129.0	156.0	545.3	Linked from: Roof: Joist, Support 2
2 - Uniform (PLF)	0 to 22' 5"	N/A	129.0	156.0	545.3	Linked from: Roof: Joist, Support 2

Member Notes
Ridge Ream

FORTE WEB

MEMBER REPORT

PASSED

Roof, Bottom Left Beam

1 piece(s) 6 x 8 Douglas Fir-Larch No. 1

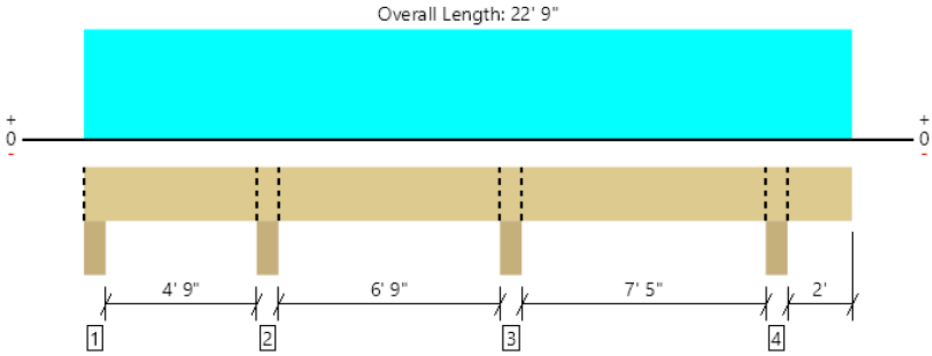

All locations are measured from the outside face of left support (or left cantilever end). All dimensions are horizontal.

Design Results	Actual @ Location	Allowed	Result	LDF	Load: Combination (Pattern)
Member Reaction (lbs)	7074 @ 12' 7 3/4"	18906 (5.50")	Passed (37%)	--	1.0 D + 1.0 S (Adj Spans)
Shear (lbs)	3024 @ 13' 6"	5376	Passed (56%)	1.15	1.0 D + 1.0 S (Adj Spans)
Moment (Ft-lbs)	-5019 @ 12' 7 3/4"	5930	Passed (85%)	1.15	1.0 D + 1.0 S (Adj Spans)
Live Load Defl. (in)	0.098 @ 16' 9 11/16"	0.394	Passed (L/966)	--	1.0 D + 1.0 S (Alt Spans)
Total Load Defl. (in)	0.115 @ 16' 9 3/4"	0.525	Passed (L/820)	--	1.0 D + 1.0 S (Alt Spans)

System : Roof
Member Type : Drop Beam
Building Use : Commercial
Building Code : IBC 2015
Design Methodology : ASD
Member Pitch : 0/12

- Deflection criteria: LL (L/240) and TL (L/180).
- Overhang deflection criteria: LL (2L/240) and TL (2L/180).
- Top Edge Bracing (Lu): Top compression edge must be braced at 22' 9" o/c unless detailed otherwise.
- Bottom Edge Bracing (Lu): Bottom compression edge must be braced at 22' 9" o/c unless detailed otherwise.
- Applicable calculations are based on NDS.

Supports	Bearing Length			Loads to Supports (lbs)				Accessories
	Total	Available	Required	Dead	Roof Live	Snow	Total	
1 - Column - SPF	5.50"	5.50"	1.50"	370	474	1659	2503	Blocking
2 - Column - SPF	5.50"	5.50"	1.67"	1098	1323	4634	7055	Blocking
3 - Column - SPF	5.50"	5.50"	2.06"	1385	1624	5689	8698	Blocking
4 - Column - SPF	5.50"	5.50"	1.50"	968	1109	3884	5961	Blocking

- Blocking Panels are assumed to carry no loads applied directly above them and the full load is applied to the member being designed.

Vertical Loads	Location (Side)	Tributary Width	Dead (0.90)	Roof Live (non-snow: 1.25)	Snow (1.15)	Comments
0 - Self Weight (PLF)	0 to 22' 9"	N/A	10.4	--	--	
1 - Uniform (PLF)	0 to 22' 9"	N/A	157.5	187.5	657.0	Linked from: Roof: Joist, Support 1

FORTE WEB

MEMBER REPORT

PASSED

Roof, Bottom Beam Right

1 piece(s) 6 x 8 Douglas Fir-Larch No. 1

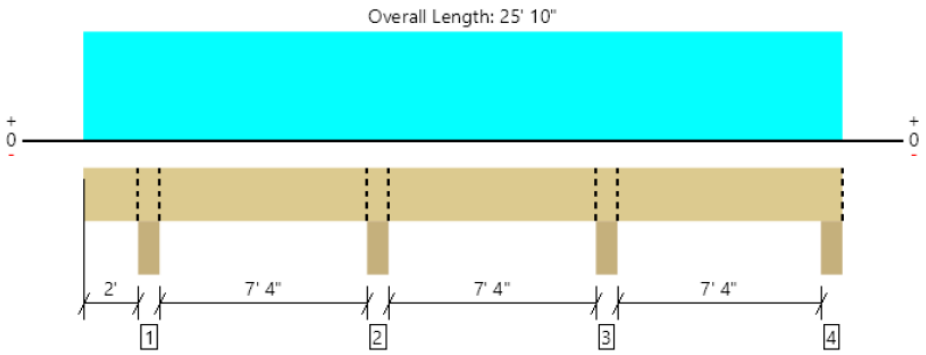

All locations are measured from the outside face of left support (or left cantilever end). All dimensions are horizontal.

Design Results	Actual @ Location	Allowed	Result	LDF	Load: Combination (Pattern)
Member Reaction (lbs)	7371 @ 17' 9 3/4"	18906 (5.50")	Passed (39%)	--	1.0 D + 1.0 S (Adj Spans)
Shear (lbs)	3167 @ 18' 8"	5376	Passed (59%)	1.15	1.0 D + 1.0 S (Adj Spans)
Moment (Ft-lbs)	-5384 @ 17' 9 3/4"	5930	Passed (91%)	1.15	1.0 D + 1.0 S (Adj Spans)
Live Load Defl. (in)	0.107 @ 21' 10 7/8"	0.384	Passed (L/866)	--	1.0 D + 1.0 S (Alt Spans)
Total Load Defl. (in)	0.128 @ 21' 11 1/4"	0.512	Passed (L/719)	--	1.0 D + 1.0 S (Alt Spans)

System : Roof
Member Type : Drop Beam
Building Use : Commercial
Building Code : IBC 2015
Design Methodology : ASD
Member Pitch : 0/12

- Deflection criteria: LL (L/240) and TL (L/180).
- Overhang deflection criteria: LL (2L/240) and TL (2L/180).
- Top Edge Bracing (Lu): Top compression edge must be braced at 25' 10" o/c unless detailed otherwise.
- Bottom Edge Bracing (Lu): Bottom compression edge must be braced at 25' 10" o/c unless detailed otherwise.
- Applicable calculations are based on NDS.

Supports	Bearing Length			Loads to Supports (lbs)				Accessories
	Total	Available	Required	Dead	Roof Live	Snow	Total	
1 - Column - SPF	5.50"	5.50"	1.50"	965	1114	3903	5982	Blocking
2 - Column - SPF	5.50"	5.50"	2.06"	1358	1634	5726	8718	Blocking
3 - Column - SPF	5.50"	5.50"	2.14"	1448	1690	5923	9061	Blocking
4 - Column - SPF	5.50"	5.50"	1.50"	568	673	2359	3600	Blocking

- Blocking Panels are assumed to carry no loads applied directly above them and the full load is applied to the member being designed.

Vertical Loads	Location (Side)	Tributary Width	Dead (0.90)	Roof Live (non-snow: 1.25)	Snow (1.15)	Comments
0 - Self Weight (PLF)	0 to 25' 10"	N/A	10.4	--	--	
1 - Uniform (PLF)	0 to 25' 10"	N/A	157.5	187.5	657.0	Linked from: Roof: Joist, Support 1

FORTE WEB

MEMBER REPORT

PASSED

Roof, Roof: Joist

1 piece(s) 2 x 12 Douglas Fir-Larch No. 1 @ 16" OC

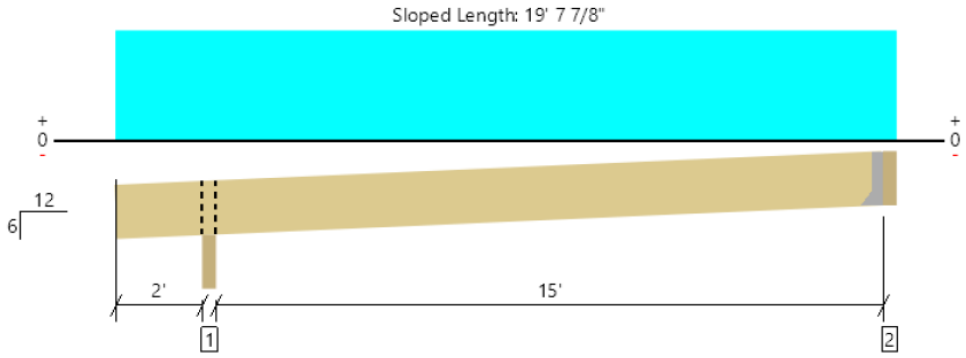

All locations are measured from the outside face of left support (or left cantilever end). All dimensions are horizontal.

Member Length : 19' 9 5/8"

System : Roof
Member Type : Joist
Building Use : Commercial
Building Code : IBC 2015
Design Methodology : ASD
Member Pitch : 6/12

Design Results	Actual @ Location	Allowed	Result	LDF	Load: Combination (Pattern)
Member Reaction (lbs)	866 @ 17' 3 1/2"	1406 (1.50")	Passed (62%)	--	1.0 D + 1.0 S (Alt Spans)
Shear (lbs)	780 @ 3' 1 9/16"	2329	Passed (33%)	1.15	1.0 D + 1.0 S (All Spans)
Moment (Ft-lbs)	3238 @ 9' 9 11/16"	3487	Passed (93%)	1.15	1.0 D + 1.0 S (Alt Spans)
Live Load Defl. (in)	0.446 @ 9' 8 15/16"	0.564	Passed (L/456)	--	1.0 D + 1.0 S (Alt Spans)
Total Load Defl. (in)	0.550 @ 9' 9"	0.847	Passed (L/370)	--	1.0 D + 1.0 S (Alt Spans)

- Deflection criteria: LL (L/360) and TL (L/240).
- Overhang deflection criteria: LL (2L/360) and TL (2L/240). Upward deflection on left cantilever exceeds overhang deflection criteria.
- Top Edge Bracing (Lu): Top compression edge must be braced at 3' o/c unless detailed otherwise.
- Bottom Edge Bracing (Lu): Bottom compression edge must be braced at 19' 4" o/c unless detailed otherwise.
- A 15% increase in the moment capacity has been added to account for repetitive member usage.
- Applicable calculations are based on NDS.

Supports	Bearing Length			Loads to Supports (lbs)				Accessories
	Total	Available	Required	Dead	Roof Live	Snow	Total	
1 - Beveled Plate - SPF	3.50"	3.50"	1.60"	221	263	921	1405	Blocking
2 - Hanger on 11 1/4" PSL beam	3.50"	Hanger[1]	1.50"	172	208	727	1107	See note [1]

- Blocking Panels are assumed to carry no loads applied directly above them and the full load is applied to the member being designed.
- At hanger supports, the Total Bearing dimension is equal to the width of the material that is supporting the hanger
- [1] See Connector grid below for additional information and/or requirements.

Connector: Simpson Strong-Tie						
Support	Model	Seat Length	Top Fasteners	Face Fasteners	Member Fasteners	Accessories
2 - Face Mount Hanger	LSSU28	3.50"	N/A	10-10d	5-10dx1.5	

Vertical Load	Location (Side)	Spacing	Dead (0.90)	Roof Live (non-snow: 1.25)	Snow (1.15)	Comments
1 - Uniform (PSF)	0 to 17' 7"	16"	15.0	20.0	70.0	Default Load

FORTE WEB

MEMBER REPORT

PASSED

Roof, Roof: Drop Beam

1 piece(s) 6 x 8 Douglas Fir-Larch No. 1

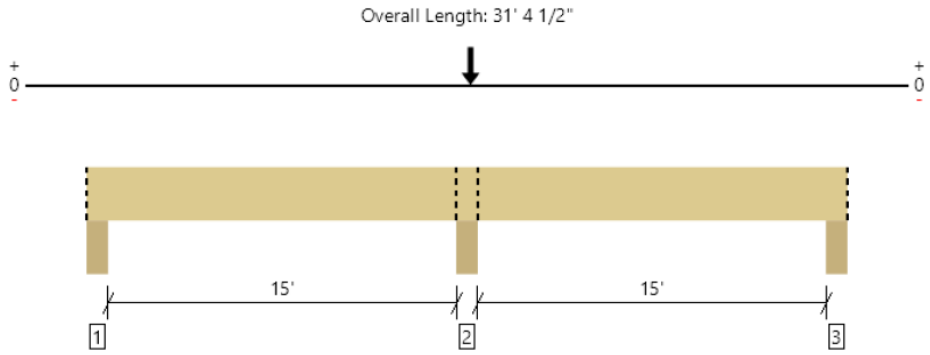

All locations are measured from the outside face of left support (or left cantilever end). All dimensions are horizontal.

Design Results	Actual @ Location	Allowed	Result	LDF	Load: Combination (Pattern)
Member Reaction (lbs)	17058 @ 15' 8 1/4"	18906 (5.50")	Passed (90%)	--	1.0 D + 1.0 S (All Spans)
Shear (lbs)	91 @ 16' 6 1/2"	4208	Passed (2%)	0.90	1.0 D (All Spans)
Moment (Ft-lbs)	-308 @ 15' 8 1/4"	4641	Passed (7%)	0.90	1.0 D (All Spans)
Live Load Defl. (in)	0.000 @ 0	0.768	Passed (2L/999+)	--	1.0 D (All Spans)
Total Load Defl. (in)	0.018 @ 6' 9 3/4"	1.024	Passed (L/999+)	--	1.0 D (All Spans)

System : Roof
Member Type : Drop Beam
Building Use : Commercial
Building Code : IBC 2015
Design Methodology : ASD
Member Pitch : 0/12

- Deflection criteria: LL (L/240) and TL (L/180).
- Top Edge Bracing (Lu): Top compression edge must be braced at 31' 5" o/c unless detailed otherwise.
- Bottom Edge Bracing (Lu): Bottom compression edge must be braced at 31' 5" o/c unless detailed otherwise.
- Applicable calculations are based on NDS.

Supports	Bearing Length			Loads to Supports (lbs)				Accessories
	Total	Available	Required	Dead	Roof Live	Snow	Total	
1 - Column - SPF	5.50"	5.50"	1.50"	64	-	-	64	Blocking
2 - Column - SPF	5.50"	5.50"	4.96"	3665	3832	13393	20890	Blocking
3 - Column - SPF	5.50"	5.50"	1.50"	64	-	-	64	Blocking

- Blocking Panels are assumed to carry no loads applied directly above them and the full load is applied to the member being designed.

Vertical Loads	Location (Side)	Tributary Width	Dead (0.90)	Roof Live (non-snow: 1.25)	Snow (1.15)	Comments
0 - Self Weight (PLF)	0 to 31' 4 1/2"	N/A	10.4	--	--	
1 - Point (lb)	15' 10"	N/A	3464	3832	13393	Linked from: Ridge Beam, Support 1

Weyerhaeuser Notes

Appendix II

Detail Cost Estimates of project

Item #	component description	component use	source	qty	price	extended
1	2x12x20	Rafters	Randalls Lumber	60.00	$ 34.00	$ 2,040.00
2	sloped rafter hanger	hang rafters from ridge	HDO	60.00	$ 8.00	$ 480.00
3	Rafter tie	Attach rafter to side beams	HDO	60.00	$ 2.00	$ 120.00
4	Toungue and grove ceiling		Randalls Lumber	1,240.00	$ 1.90	$ 2,356.00
5	Propanel Sheets		Randalls Lumber	1,240.00	$ 1.19	$ 1,475.60
6	roofing underlayment		HDO			$ 500.00
7	Ridge Cap		HDO	40.00	$ 2.00	$ 80.00
8	Gable Flashing		HDO	40.00	$ 2.50	$ 100.00
9	Drip Edge		HDO	60.00	$ 2.50	$ 150.00
10	Ridge Beam 6x18		Randalls Lumber	38.00	$ 27.00	$ 1,026.00
11	Right Side Roof Beam 6x8		Randalls Lumber	25.00	$ 15.00	$ 375.00
12	left Side Roof Beam 6x8		Randalls Lumber	26.00	$ 15.00	$ 390.00
13	pressure Treated Posts 6x8 x10'		HDO	8.00	$ 48.00	$ 384.00
14	Pressure Treated posts 6x8 x16'		HDO	1.00	$ 60.00	$ 60.00
15	Simpson Black Post base		HDO	9.00	$ 45.00	$ 405.00
16	Simpson black Post cap to hold beams		HDO	8.00	$ 40.00	$ 320.00
17	Simpson beam hanger		HDO	5.00	$ 20.00	$ 100.00
18	Beam Strap front (Front center Cross)		HDO	2.00	$ 100.00	$ 200.00
19	Railing Clamps		HDO	184.00	$ 2.50	$ 460.00
20	4" Wire mesh panels 4x10		ReclaMetals	8.00	$ 75.00	$ 600.00
21	Railing Top Wood 2x8x16		Randalls Lumber	2.00	$ 14.00	$ 28.00
22	Railing Top Wood 2x8x8		Randalls Lumber	5.00	$ 7.00	$ 35.00
23	Railing Bottom Wood 2x6x8		Randalls Lumber	5.00	$ 5.00	$ 25.00
24	Railing Bottom Wood 2x6x16		Randalls Lumber	2.00	$ 16.00	$ 32.00
25	Railing Mesh frame 2x4x16		Randalls Lumber	8.00	$ 12.00	$ 96.00
26	Railing Mesh frame 2x4x8		Randalls Lumber	20.00	$ 3.00	$ 60.00
27	Stair Raings		HDO	2	$ 300.00	$ 600.00
28	Footing 72' x 16" x 8"	Yards of concrete for footing	Randall K	2.5	$ 160.00	$ 400.00
29	Stem Wall 72' x 32" x 8"	Yards of concrete for Stemwall	Randall K	4.75	$ 160.00	$ 760.00
30	Floor 70 sq feet	Yards of concrete for floor surface	Randall K	9	$ 160.00	$ 1,440.00
31	Rebar	14 vertical and 20 Horizontal	Randall K	34	$ 7.50	$ 255.00
32	Structural Fill	under floor fill in tons	Randall K	45	$ 18.00	$ 810.00
33	Misc form ties, wire, screws, Bracing Material					$ 500.00
34	Bar grate Stairs	8 steps to intersect existing concrete stairs		$ 8.00	$ 75.00	$ 600.00
28	Misc hardward, screws, etc					$ 1,000.00
29	Stains					$ 500.00
	Contingency @ appr 15%					$ 2,500.00
	Sales Taxes					$ 1,568.12
						$22,830.72

Appendix III

Additional views of proposed structure

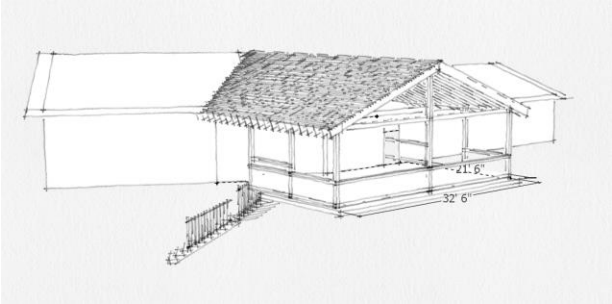

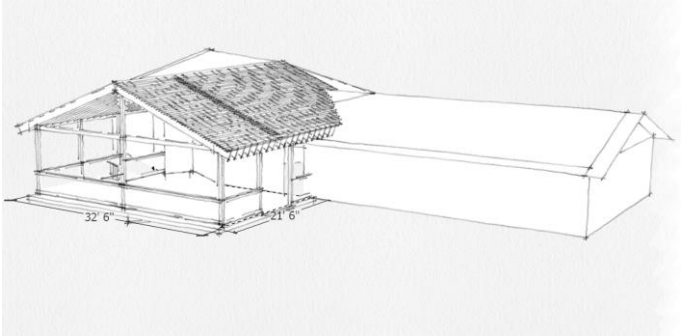

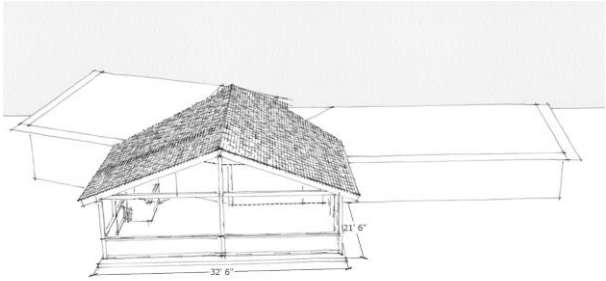

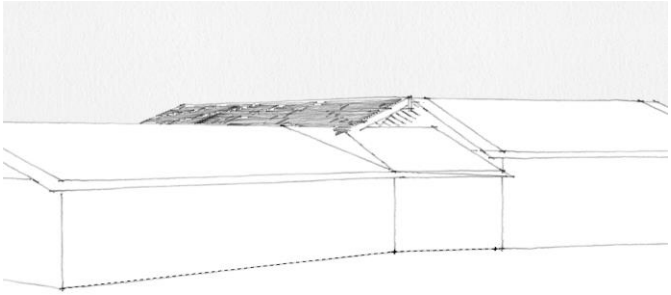

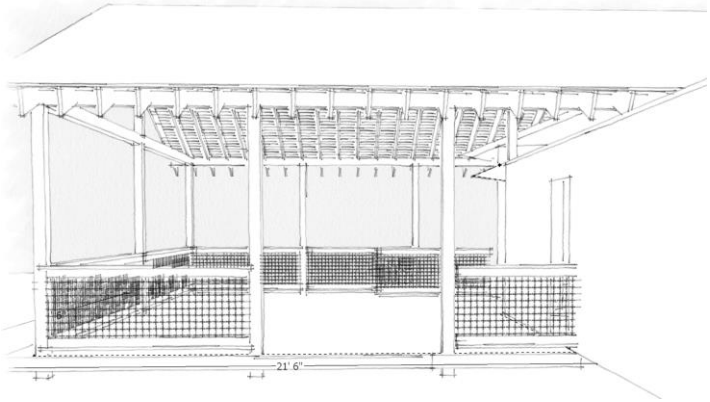

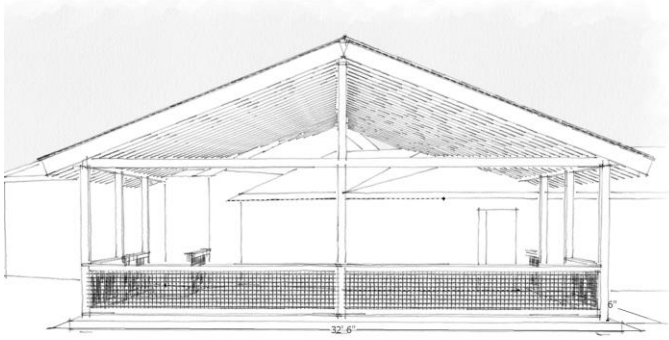

Appendix IV

Details of available funds from Garage sale

and

Mulligan money

Valle Escondido Homeowners' Association
Profit & Loss
January 1, 2010 through September 23, 2019

	Jan 1, '10 - Sep 23, 19
Ordinary Income/Expense	
Income	
4600 · GOLF	
4640 · Mulligan Money	11,978.83
Total 4600 · GOLF	11,978.83
Total Income	11,978.83
Gross Profit	11,978.83
Expense	
6200 · GOLF EXP	
6280 · Mulligan - Purcha...	4,055.58
Total 6200 · GOLF EXP	4,055.58
Total Expense	4,055.58
Net Ordinary Income	7,923.25
Net Income	7,923.25

Mulligan Money Income and Expense to date

Garage Sale Balance through 2018 and Net proceeds from Garage Sale in 2019

Valle Escondido Homeowners' Association
Balance Sheet
As of September 23, 2019

	Sep 23, 19
ASSETS	0.00
LIABILITIES & EQUITY	
Liabilities	
Long Term Liabilities	
2302 · Funds Held- Kid's Fu...	4,430.70
Total Long Term Liabilities	4,430.70
Total Liabilities	4,430.70
TOTAL LIABILITIES & EQUITY	4,430.70

Valle Escondido Homeowners' Association
Profit & Loss
January 1 through September 23, 2019

	Jan 1 - Sep 23, 19
Ordinary Income/Expense	
Income	
4230 · Kid's Fund income	1,174.25
Total Income	1,174.25
Gross Profit	1,174.25
Expense	
6000 · CLUBHOUSE EXP	
6035 · Other Clubhouse Expenses	
6135 · Kids Fund Expense	178.24
Total 6035 · Other Clubhouse Expen...	178.24
Total 6000 · CLUBHOUSE EXP	178.24
Total Expense	178.24
Net Ordinary Income	996.01
Net Income	996.01